syona
design meets comfort

ROOTS
ADDING VALUE

flex.

"From brainstorming to board meetings, elevate collaboration with our versatile multipurpose table."

syonaroots.com

OUR WORKBENCH

Experience the luxury of ample space with our spacious table top - perfect for spreading out and getting things done! With its expansive surface area, maximize your productivity and comfort while having plenty of room to let your creativity flow.

THE REAL FLEX

Transform your space in seconds with our versatile and easy-to-use foldable 'FLEX' table. With its sleek design and durable construction, it's the ultimate solution for modern living and perfect addition to any home or office.

LET'S MOVE ON

Our product is equipped with high-quality castor wheels with a unique locking feature, while providing effortless mobility and a comfortable user experience. These wheels are designed to move quietly and smoothly across various surfaces, making it easy to maneuver the product around with ease.

STORE IT STYLISH

The perfect space - saving solution. Our 'Flex' table offers easy storage and portability without sacrificing style! Maximize your living space with our expertly crafted and precisely engineered foldable table.

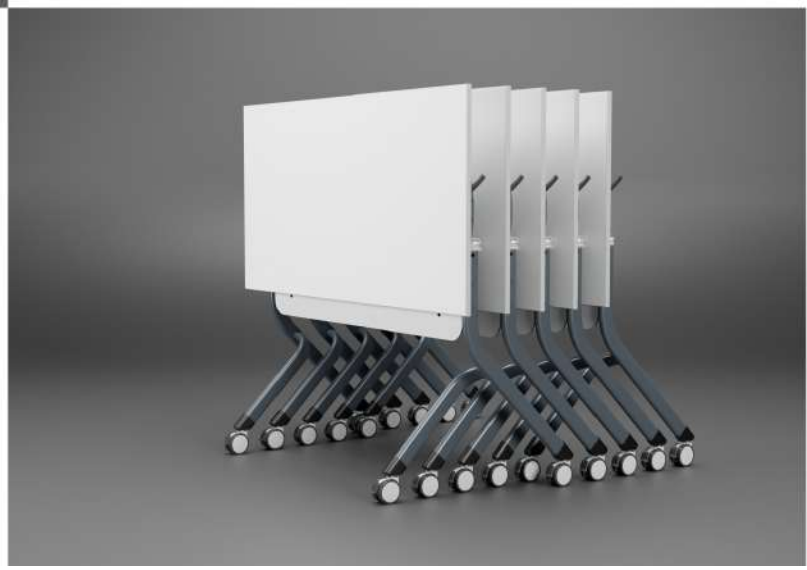

LAY IT OUT !

Cutomize Your Workspace !

*The layout designs are for reference purpose only.
*The layouts are completely customizable based on your office / home setup.

DIMENSIONS

*All dimensions are in 'mm'

STANDARD

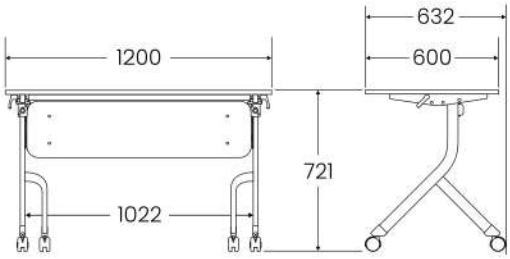

FOLDED

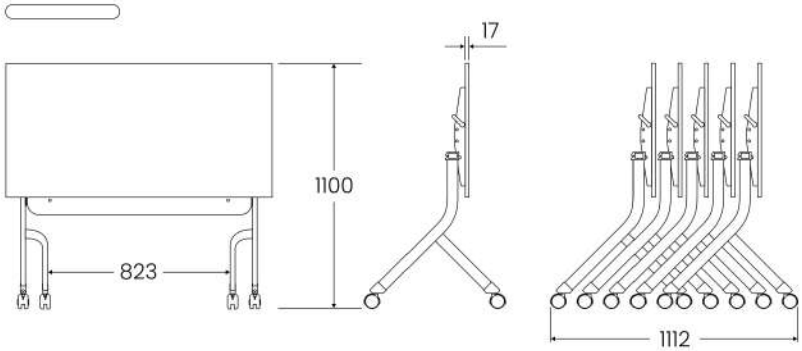

COLORS

Board (Top)

UNI 75703
Silver Grey

Board (Bleed)

RAL 7035
Light Grey

Frame

RAL 7016
Anthracite Grey

Castors

RAL 9004
Signal Black

MATERIAL & SPEC.

Top Board	Medium Density Fiber Board (17mm)
Front Board	Medium Density Fiber Board (6mm)
Frame	MS ERW OVAL TUBE (1.6 THK)
Castors	Nylon
Product Weight	25 kg (approx.)
Warranty	1 year

*Product conforms to International Furniture Standard BIFMA X5.5-2014
*Subject to change due to constant product improvement, however it will be carried out after mutual agreement with customer.

www.syonaroots.com

syona
design meets comfort

Kathirnaickenpalayam Road, Thoppampatti Post,
Coimbatore - 641017, Tamil Nadu, India

+91 422 423 5113
+91 422 246 1458
support@roots.co.in

A product of ROOTS